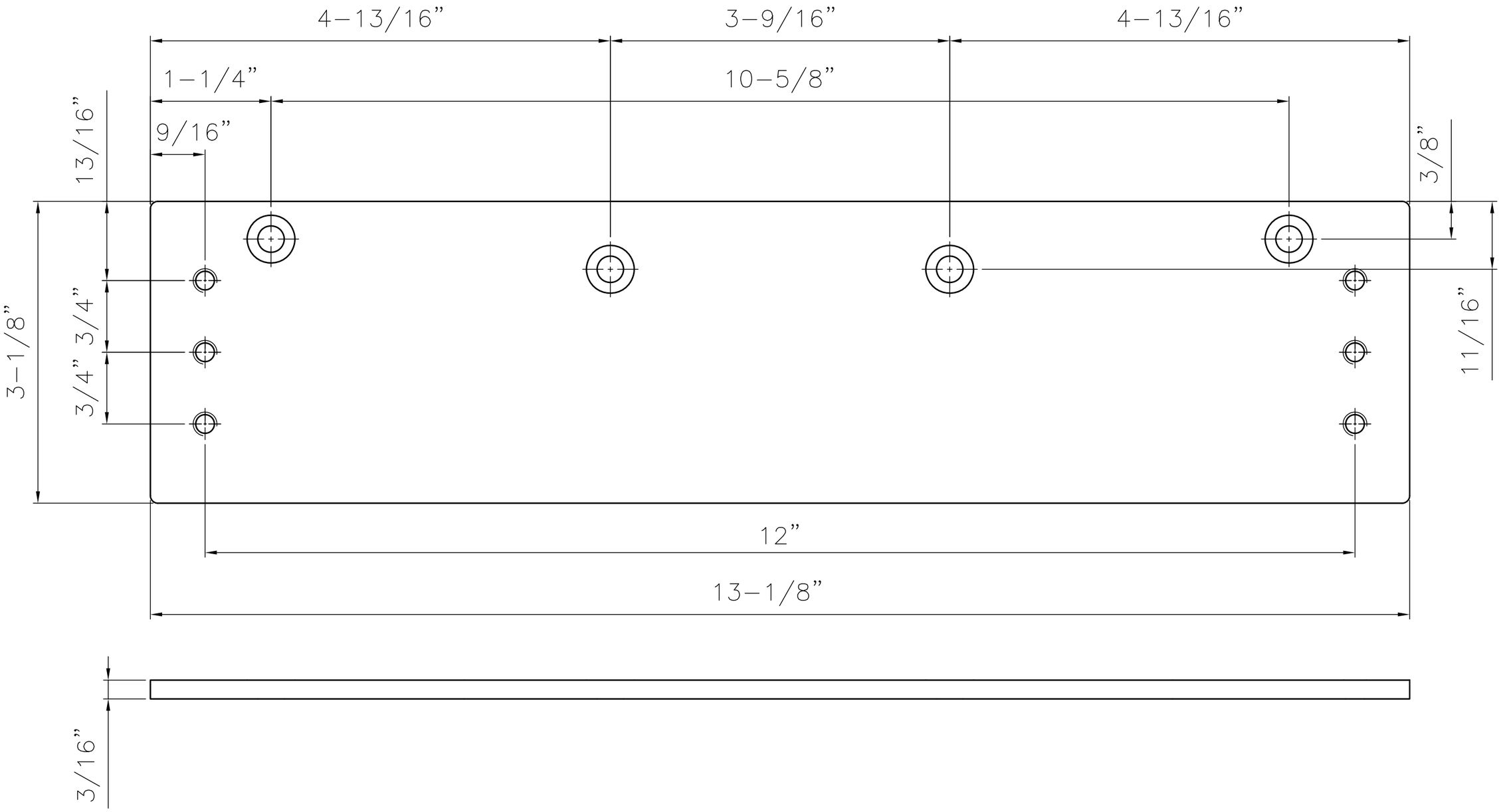
4–13/16”
3–9/16”
4–13/16”
1–1/4”
10–5/8”
9/16”
13/16”
3/8”
11/16”
3–1/8”
3/4”
3/4”
12”
13–1/8”
3/16”